Mechanical:

REV.	ECN NO.	DESCRIPTION	DATE	APPD
A	REL		21/10/2008	

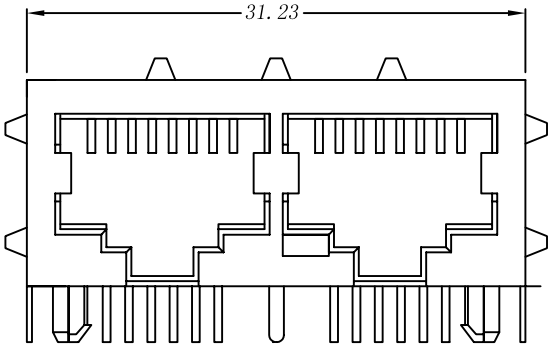

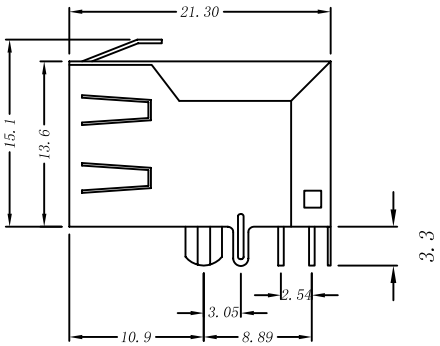

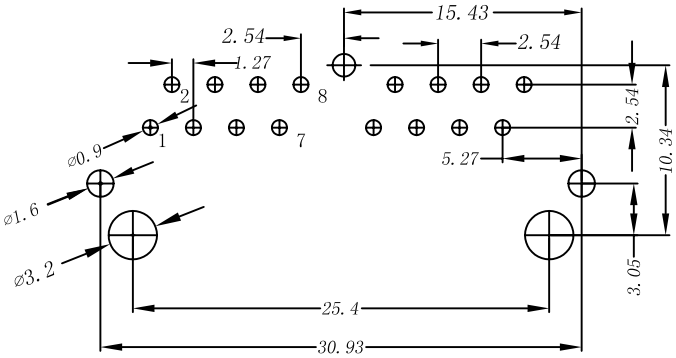

SUGGESTED PCB LAYOUT(TOP VIEW)

NOTES:

1. Designed to support application, such as SOHO(ADSL modems), LAN-on-Motherboard(LOM), hub and Switches.
2. Meets IEEE 802.3 specification
3. Connector Materials:
   Housing:Thermoplastic UL94V-0
   Contact/Shield: Copper alloy
   Shield plating: Nickel
   Contact plating: Gold 6 micro-inches min.
   In contact area.

RoHS 2002/95/EC

X:X	±0.20	APPD:	Trxcom ShenZhen Trxcom Electronics Co.,ltd
X:XX	±0.10	CHKD: miles	Title: RJ45 Connector With 10/100 Base-TX Integrated Magnetic
X:XXX	±0.05	DR:	
ANGLES	±1°	UNIT: mm	PART NO.: TRJ26204CNL

SCALE: 2/1	SHEET: 1/2	REV: A	DWG: TRC08102101	

amec
Langer Acker 32
30900 Wedemark
Germany
(+49) 5130 / 58642-0
info@amec-gmbh.de
www.amec-gmbh.de

Schematic:

REV.	ECN NO.	DESCRIPTION	DATE	APPD
A	REL		21/10/2008	

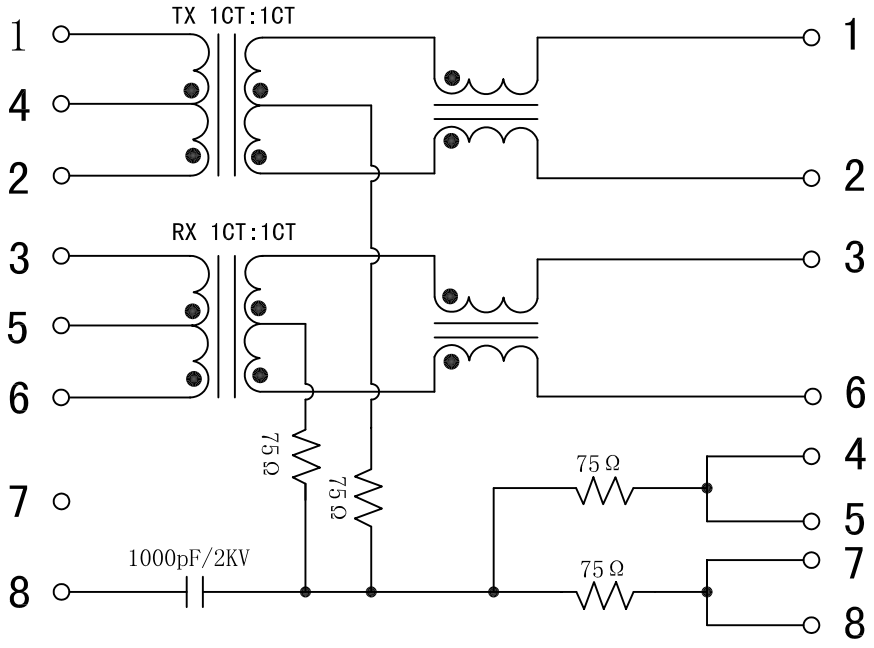

Electrical Specifications: @25℃

1. Turns Ratio (±2%) :
   TX=1CT:1CT RX=1CT:1CT
2. Return Loss:
   1-30MHz:-18dB 30-60MHz:-16dB
   60-80MHz:-14dB
3. Crosstalk:
   1-100MHz:-35dB
4. Insertion Loss:
   -1.0dB Max @1-100MHz
5. CMR:
   1-100MHz:-35dB
6. 350uH min OCL with 8mA bias current.
7. Isolation Voltage:1500V
8. Operating Temperature:0-70℃

RoHS 2002/95/EC

amec
Langer Acker 32
30900 Wedemark
Germany
(+49) 5130 / 58642-0
info@amec-gmbh.de
www.amec-gmbh.de

X:X	±0.20	APPD:	Trxcom ShenZhen Trxcom Electronics Co.,ltd
X:XX	±0.10	CHKD: miles	Title: RJ45 Connector With 10/100 Base-TX Integrated Magnetic
X:XXX	±0.05	DR:	
ANGLES	±1°	UNIT: mm	PART NO.: TRJ26204CNL

SCALE: 2/1	SHEET: 2/2	REV: A	DWG: TRC08102101	