ML9 SERIES

Tact Switch
Illuminated

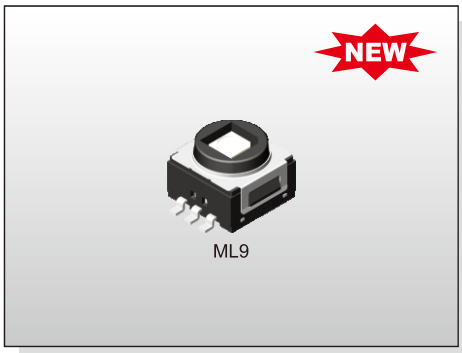

FEATURES

※Various LED options
※300,000 operation life cycles

APPLICATION

※Automotive
※Network equipment
※Telecommunications
※Medical equipment
※Industrial controls

SPECIFICATION

Contact Rating	50mA, 32V DC
Contact Resistance	100mΩ max.
Insulation Resistance	100MΩ min. 100V DC
Dielectric Strength	250V AC/1 minute
Operating Force	400±100gf
Travel	0.45mm
Operating Life	300, 000 cycles
Operating Temp.	-40°C ~ +85°C
Storage Temp.	-55°C ~ +85°C

HOW TO ORDER

M L 9 - M □ □ □ Q R

- S.M.T.
- □=Without Post / P=With Post
- Operation Force: 4=400gf
- LED Color: □=Without LED, B=Blue, G=Green, R=Red, W=White, O=Orange
- Halogen Free
- Package: Tape & Reel

CIRCUIT

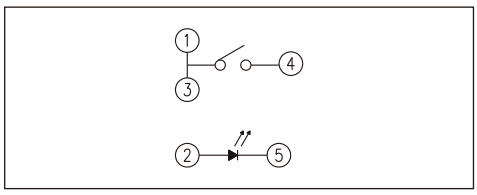

PACKAGE

<Tape & Reel>
To be confirmed

ML9

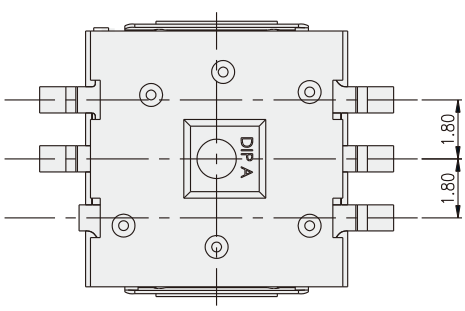

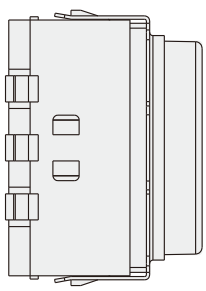

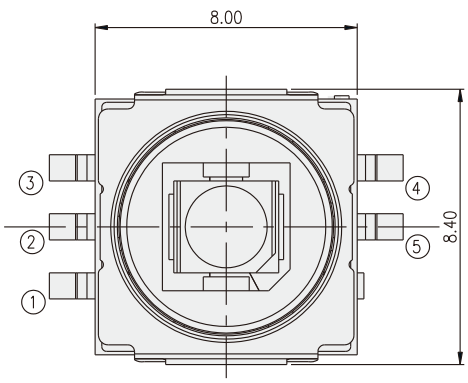

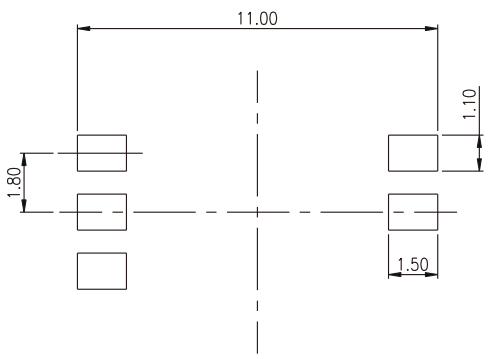
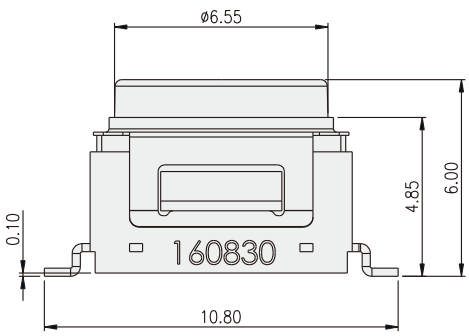
P.C.B. LAYOUT